FIG. 1A

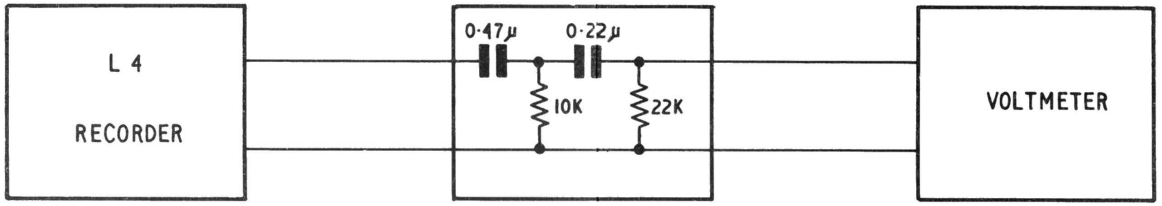

FIG. 1B

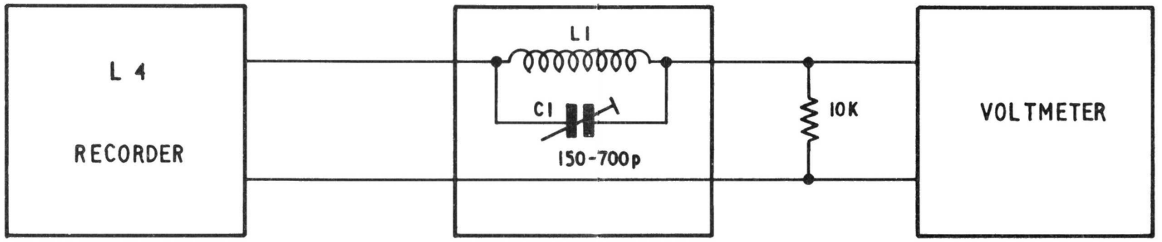

L1 E.M.I. PART No. 9A/B7359
C1 E.M.I. PART No. 9A/A15646

FIG. 1C

T1..1526

TEST EQUIPMENT FILTERS

FIG. 1

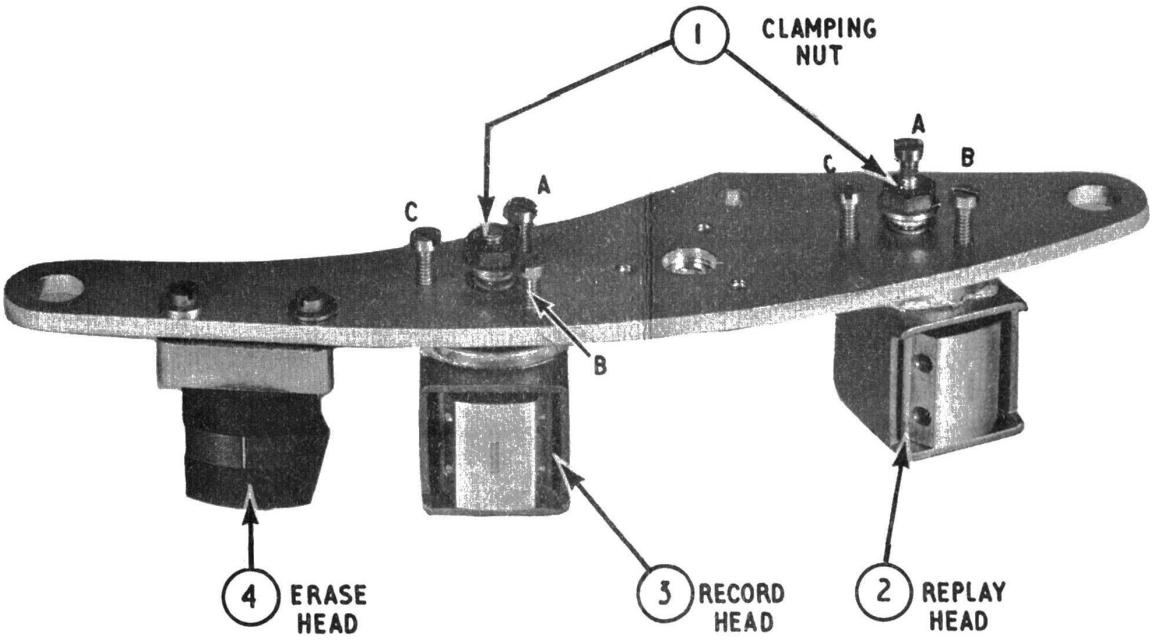

NOTE: TYPE L4B HAS FULL TRACK HEADS MOUNTED IN ALL POSITIONS.
TYPE L4D HAS A FULL TRACK ERASE HEAD AND A TWIN TRACK RECORD HEAD.

HEAD ASSEMBLY FOR TYPES L4A, L4B, & L4D

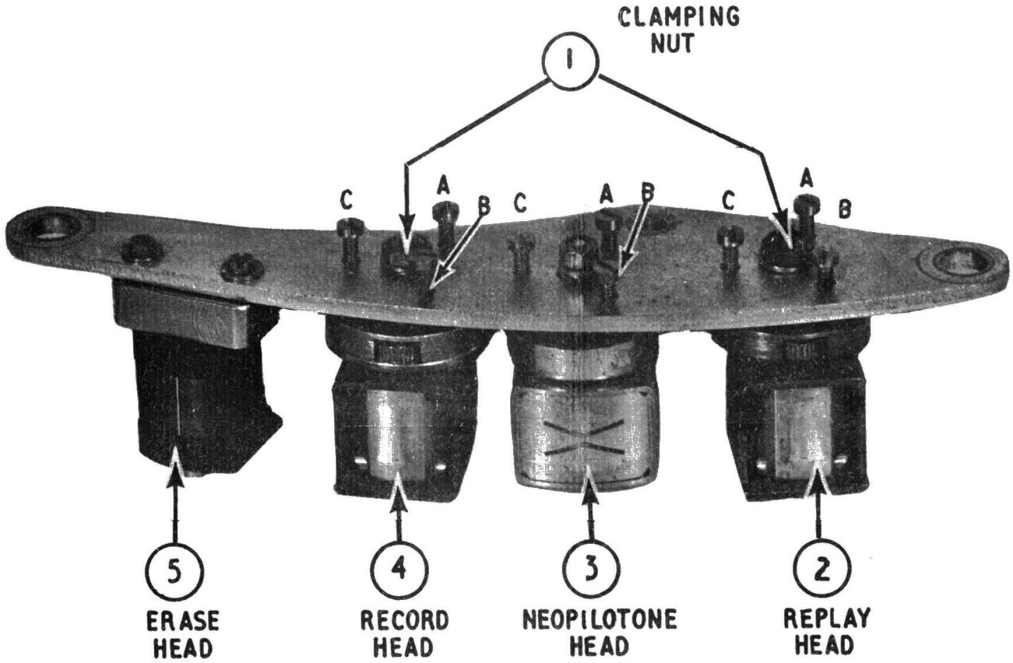

HEAD ASSEMBLY FOR TYPE L4C

FIG. 2 HEAD ASSEMBLIES TL.1526

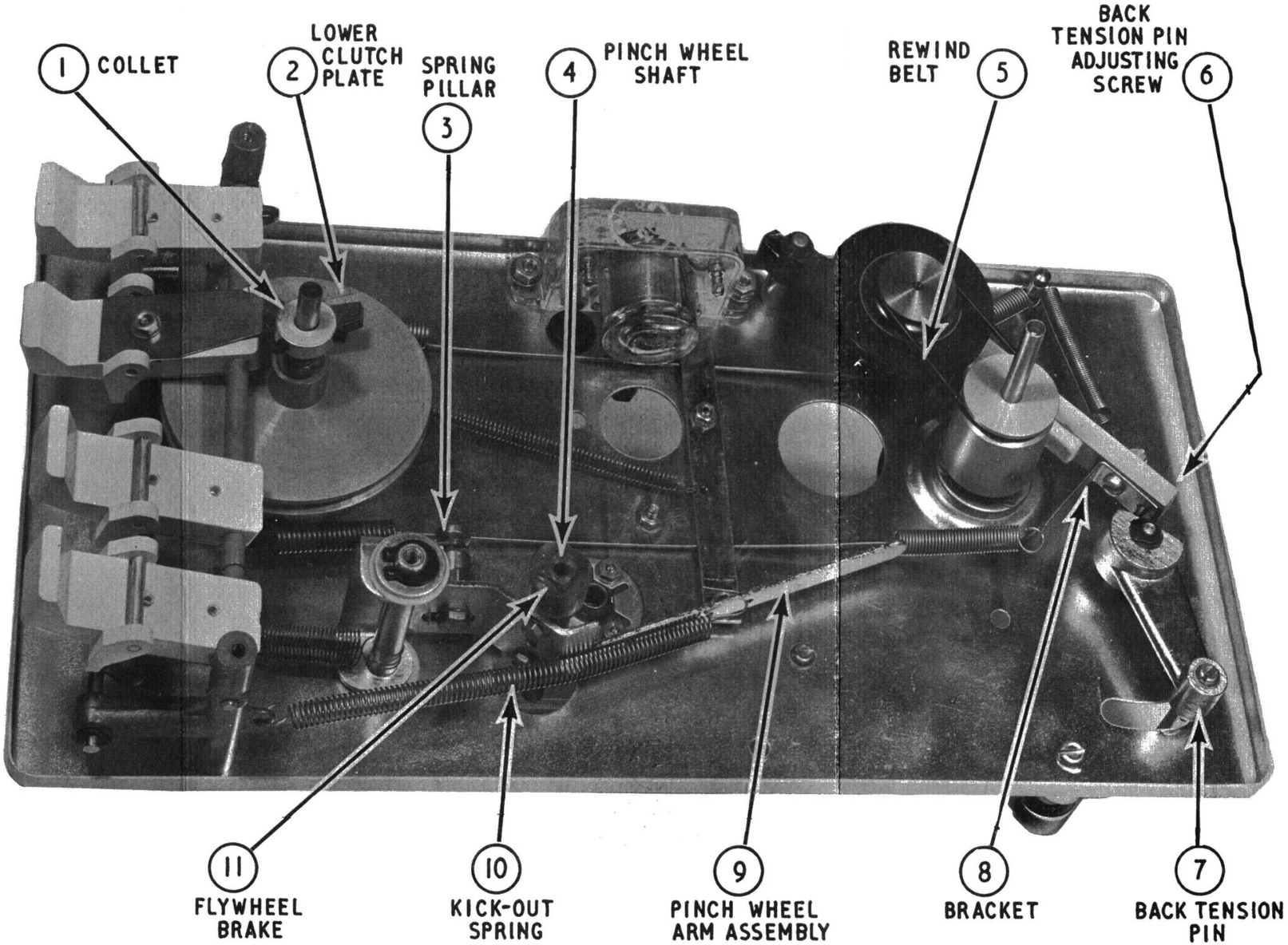

TL.1526

UNDERSIDE OF TAPE DECK

FIG. 3

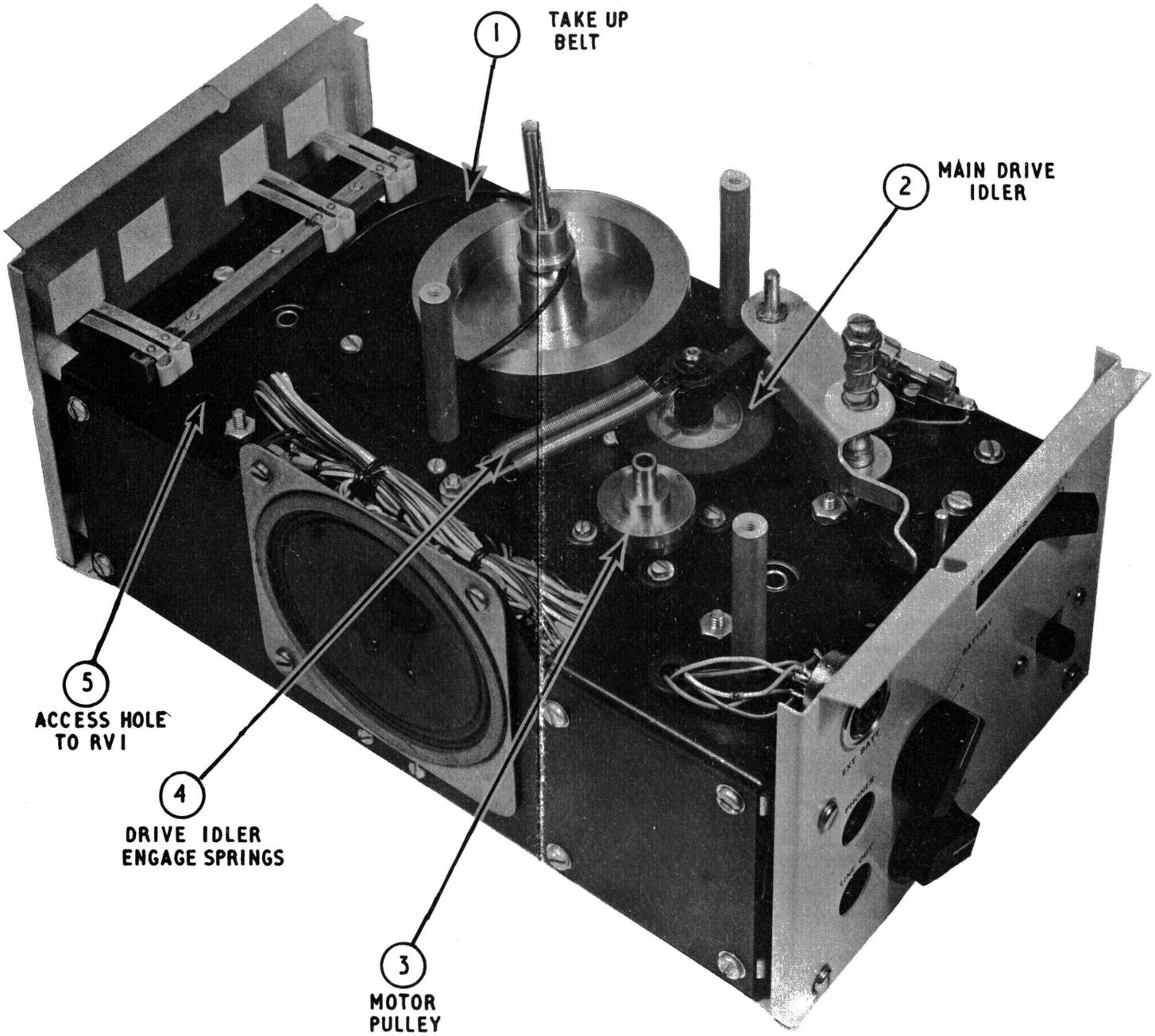

FIG.4 TOP OF CHASSIS TL.1526

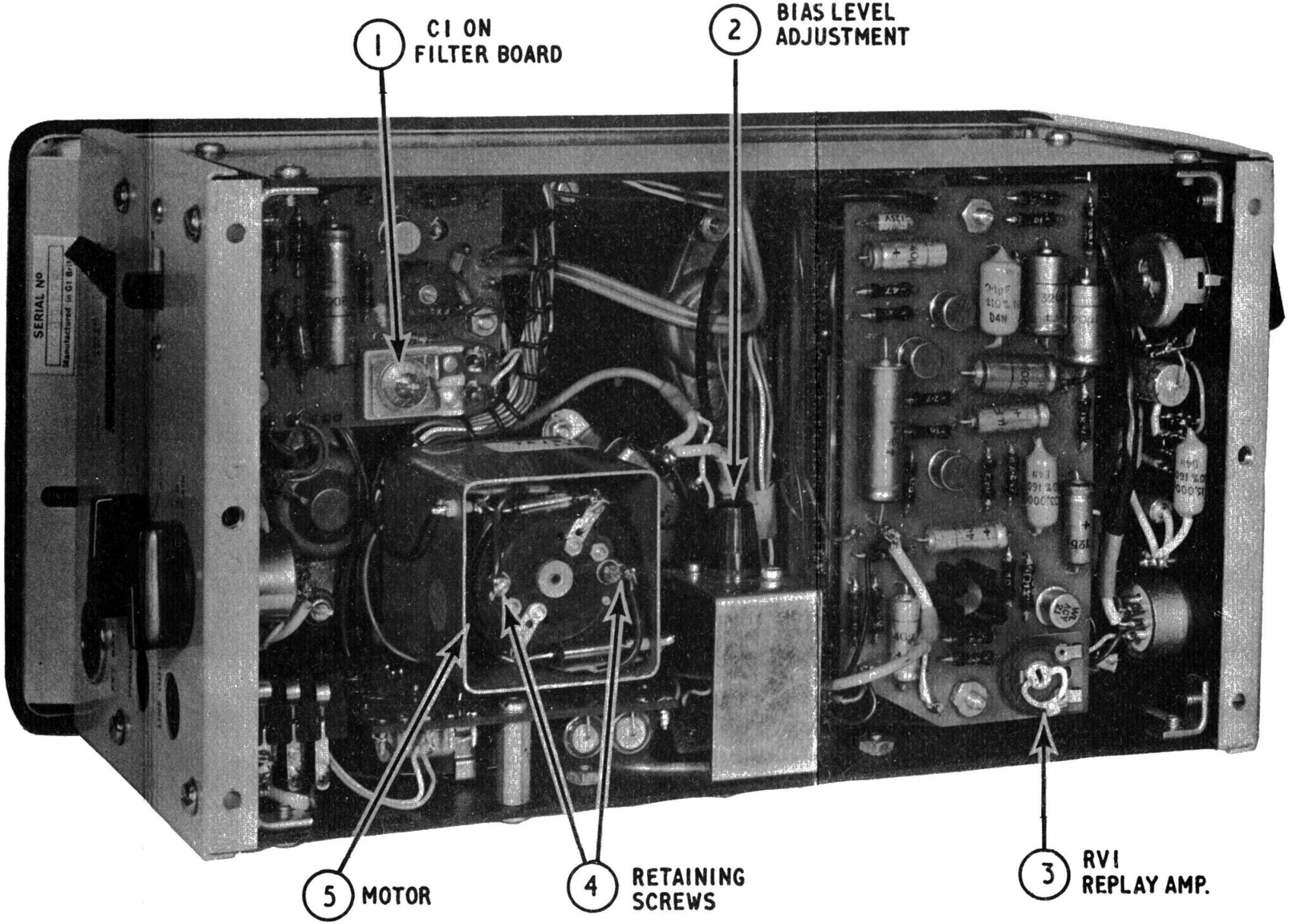

TL.1526

UNDERSIDE OF CHASSIS

FIG. 5

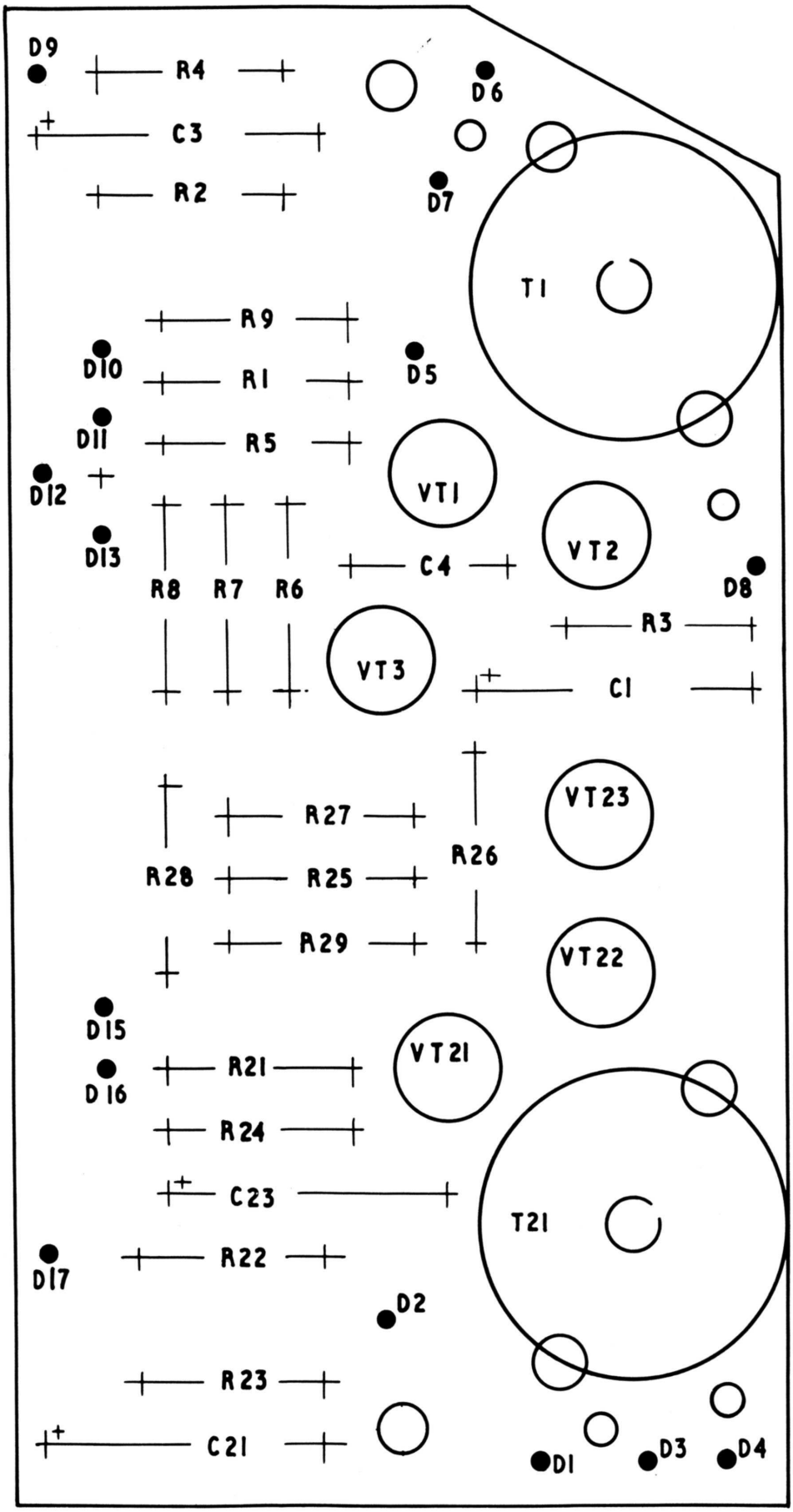

FIG. 6 MICROPHONE AMPLIFIERS - COMPONENT LAYOUT TL 1526

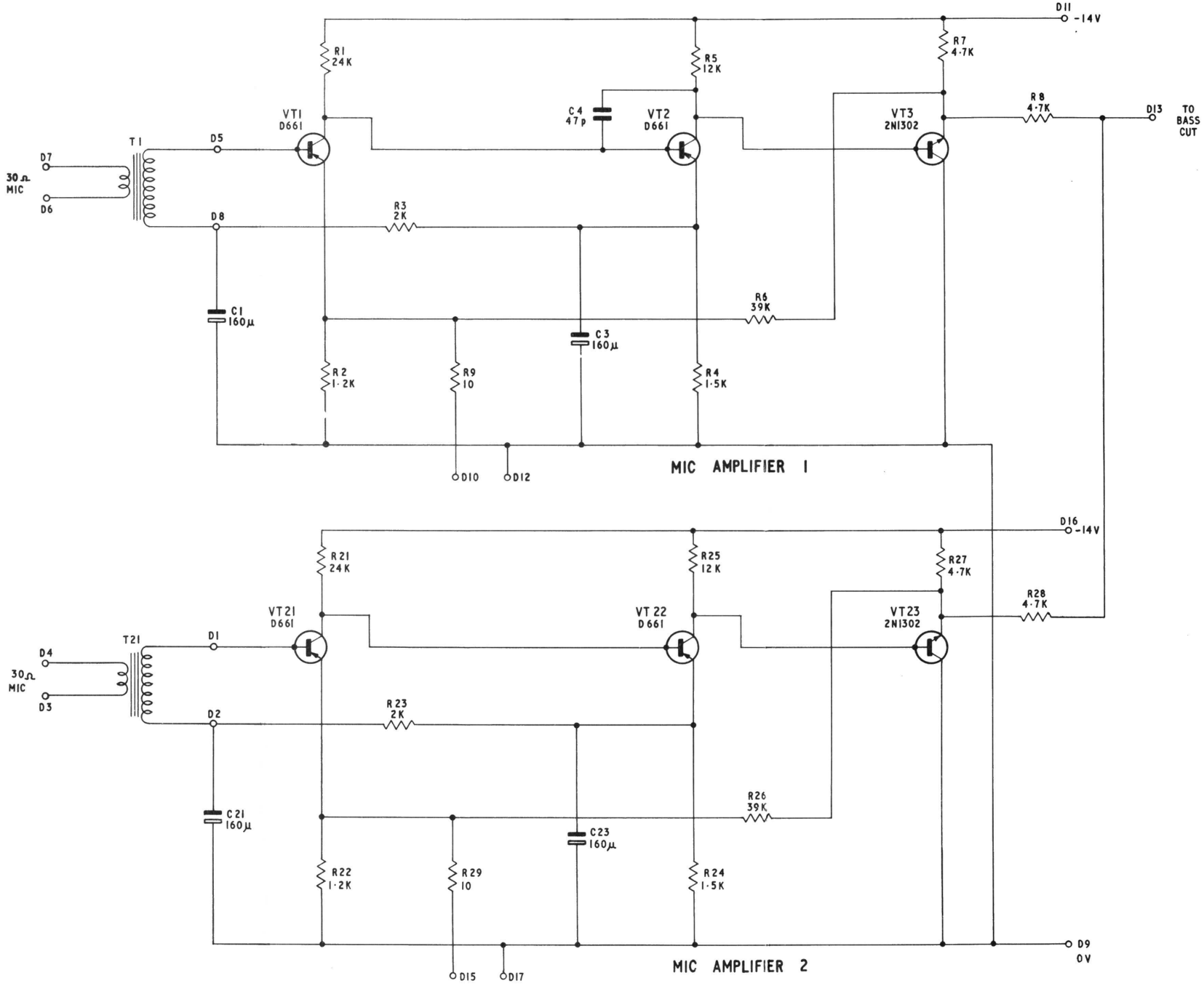

TL1526/6

MICROPHONE AMPLIFIERS – CIRCUIT DIAGRAM

FIG.7

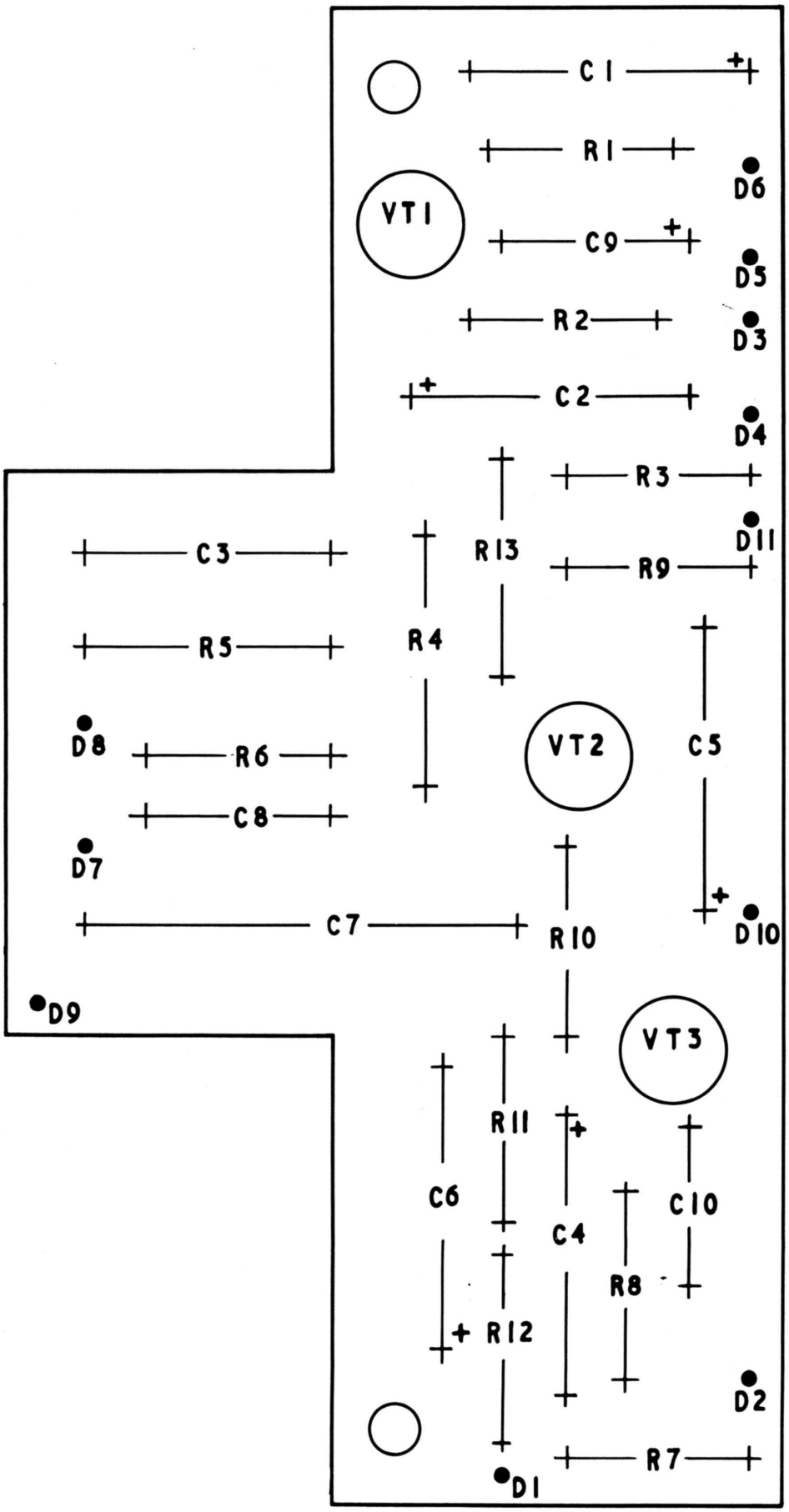

FIG.8 RECORD AMPLIFIER - COMPONENT LAYOUT TL 1526

MODEL	VALUE			
	R4	R5	C3	C8
L4A	1·3K	100	0·015µ	1500p
L4A (NAB)	1·3K	100	0·033µ	680p
L4B	1·1K	100	0·015µ	680p
L4B (NAB)	1·1K	3·9K	0·015µ	680p
L4C	1·1K	100	0·015µ	680p
L4C (NAB)	1·1K	3·9K	0·015µ	680p
L4D	1·3K	100	0·015µ	1500p
L4D (NAB)	1·3K	100	0·033µ	680p

TABLE A

* NOTE: ON EARLY MODELS C6 IS CONNECTED BETWEEN THE JUNCTION R10/R11 AND THE −14V LINE.(-VE TO −14V LINE)

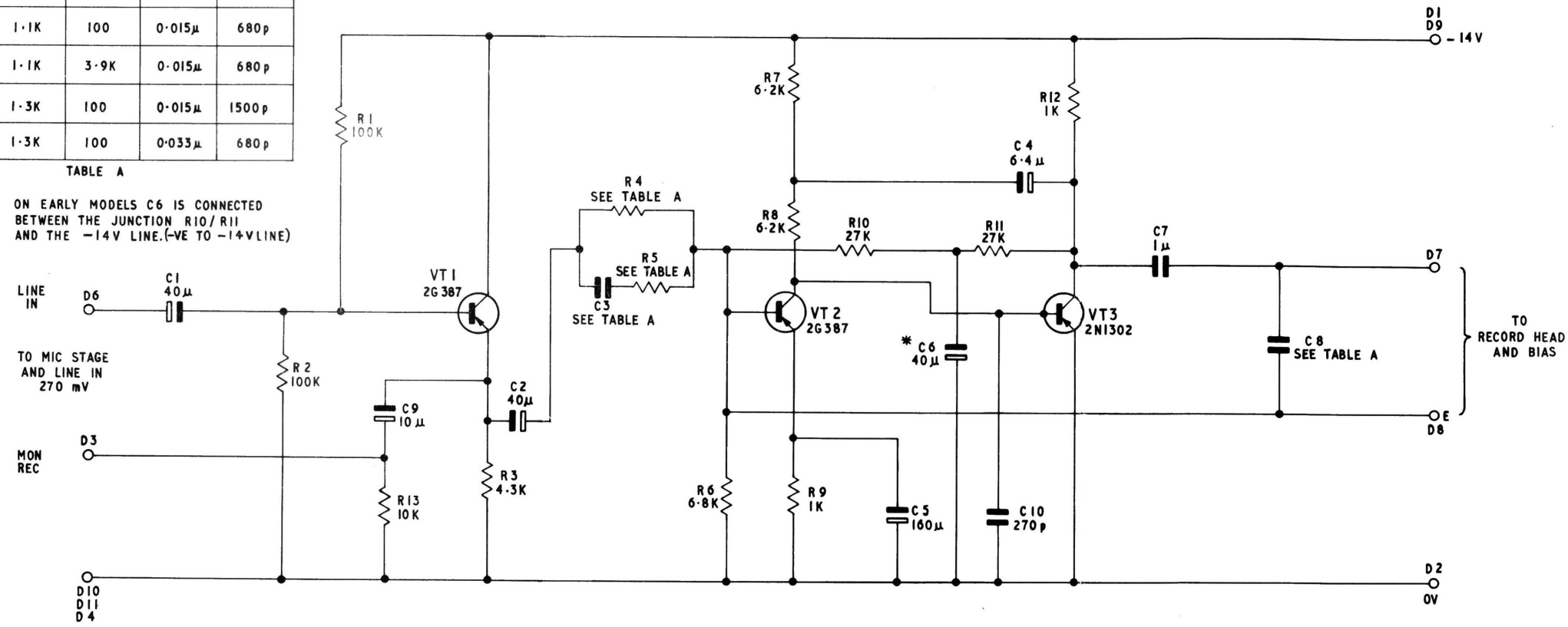

TL 1526/4

RECORD AMPLIFIER — CIRCUIT DIAGRAM

FIG. 9

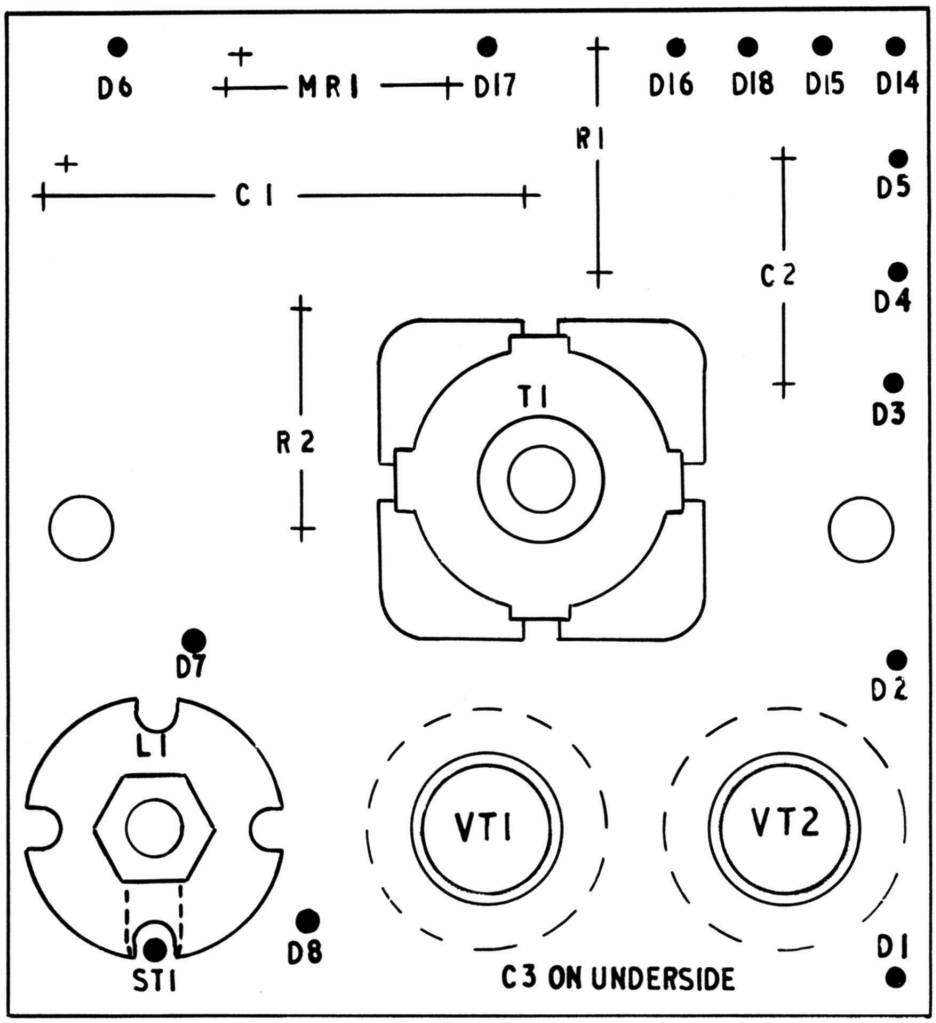

FIG. 10 BIAS & ERASE OSCILLATOR (EARLY L 4 A MODELS) TL 1526

COMPONENT LAYOUT

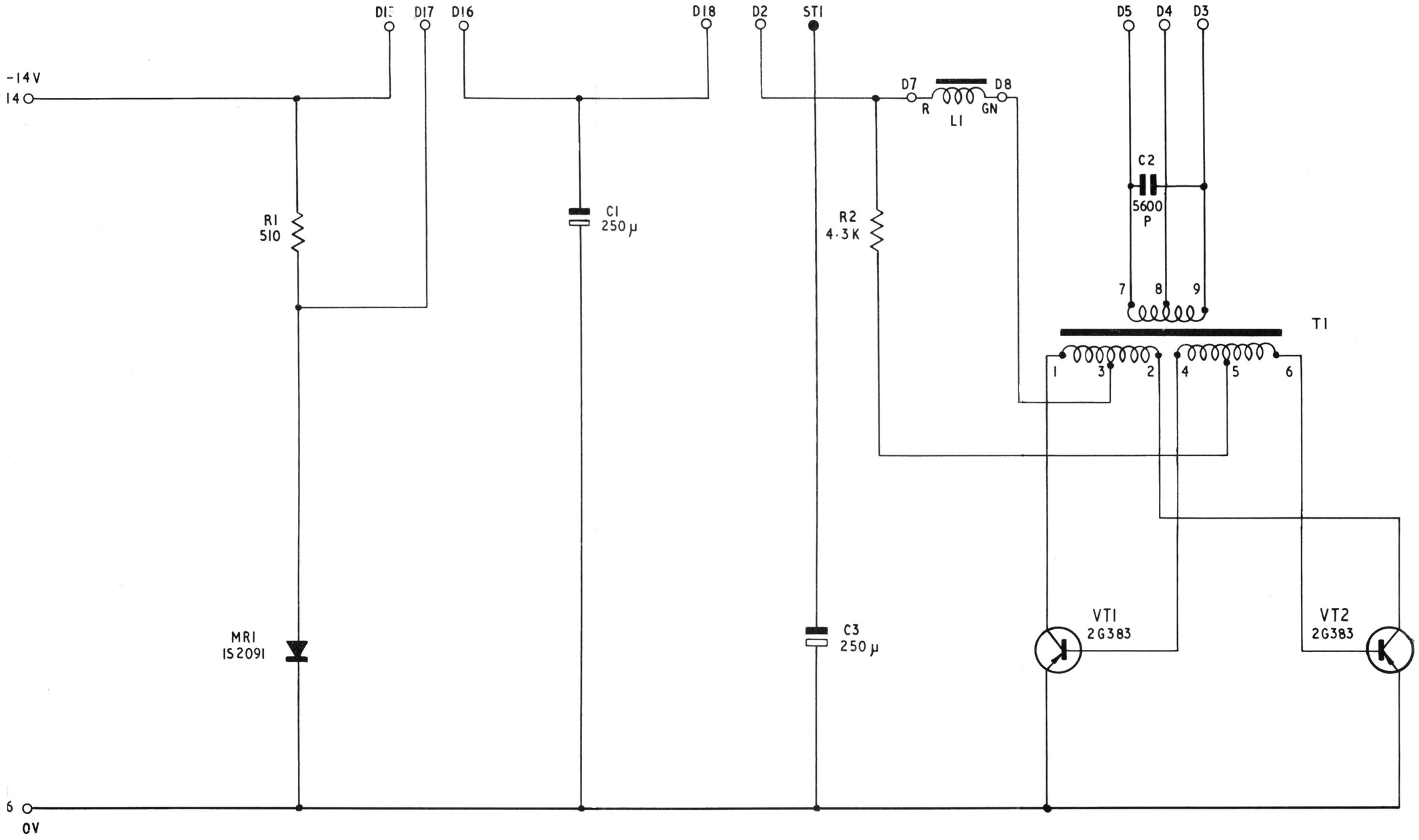

1526/8

BIAS & ERASE OSCILLATOR (EARLY L4A MODELS)– CIRCUIT DIAGRAM

FIG. 11

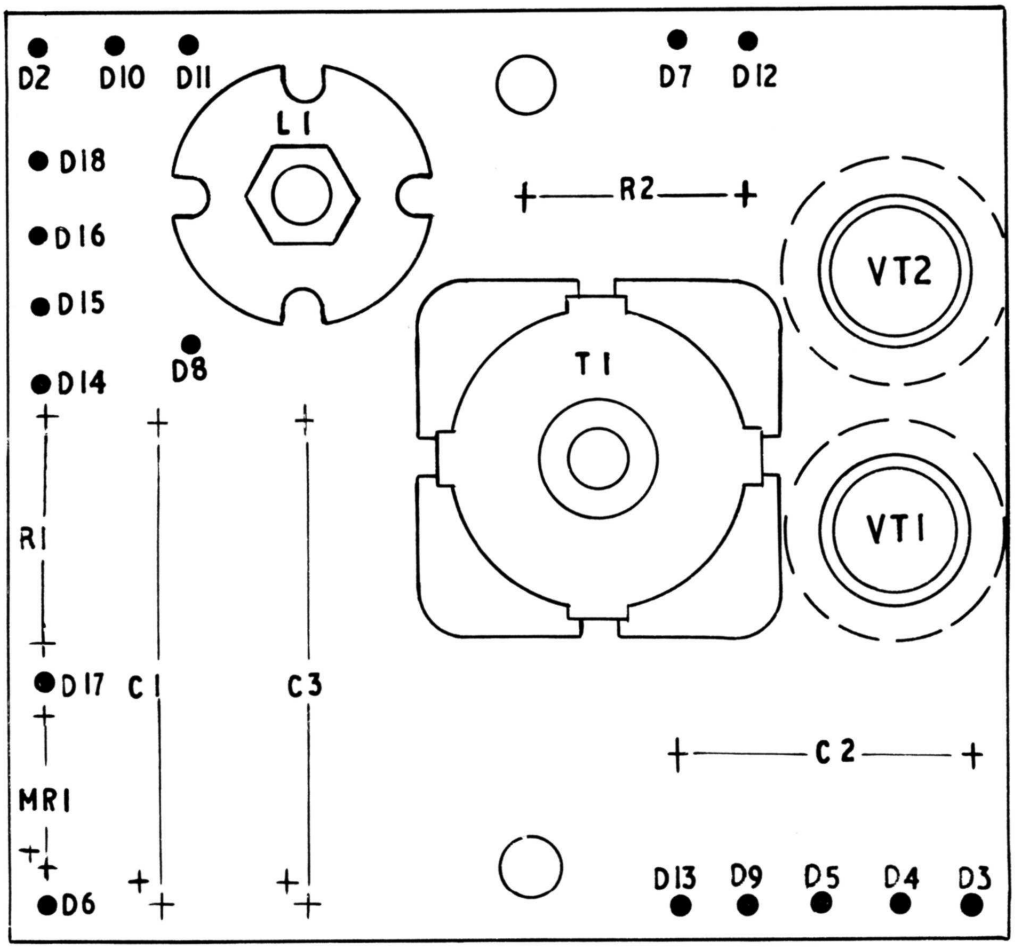

FIG.12 BIAS & ERASE OSCILLATOR — COMPONENT LAYOUT TL1526

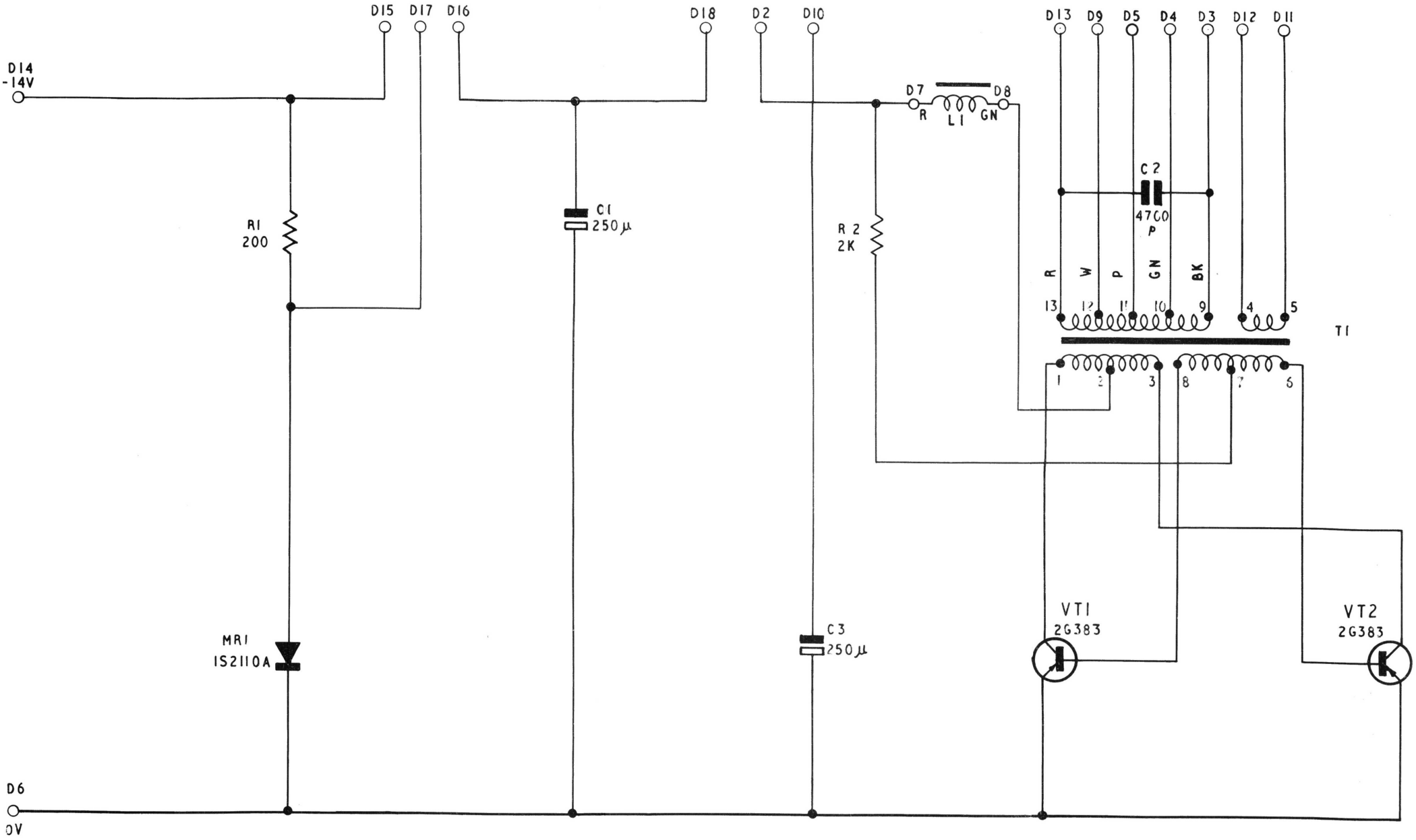

1526/1

BIAS & ERASE OSCILLATOR - CIRCUIT DIAGRAM

FIG. 13

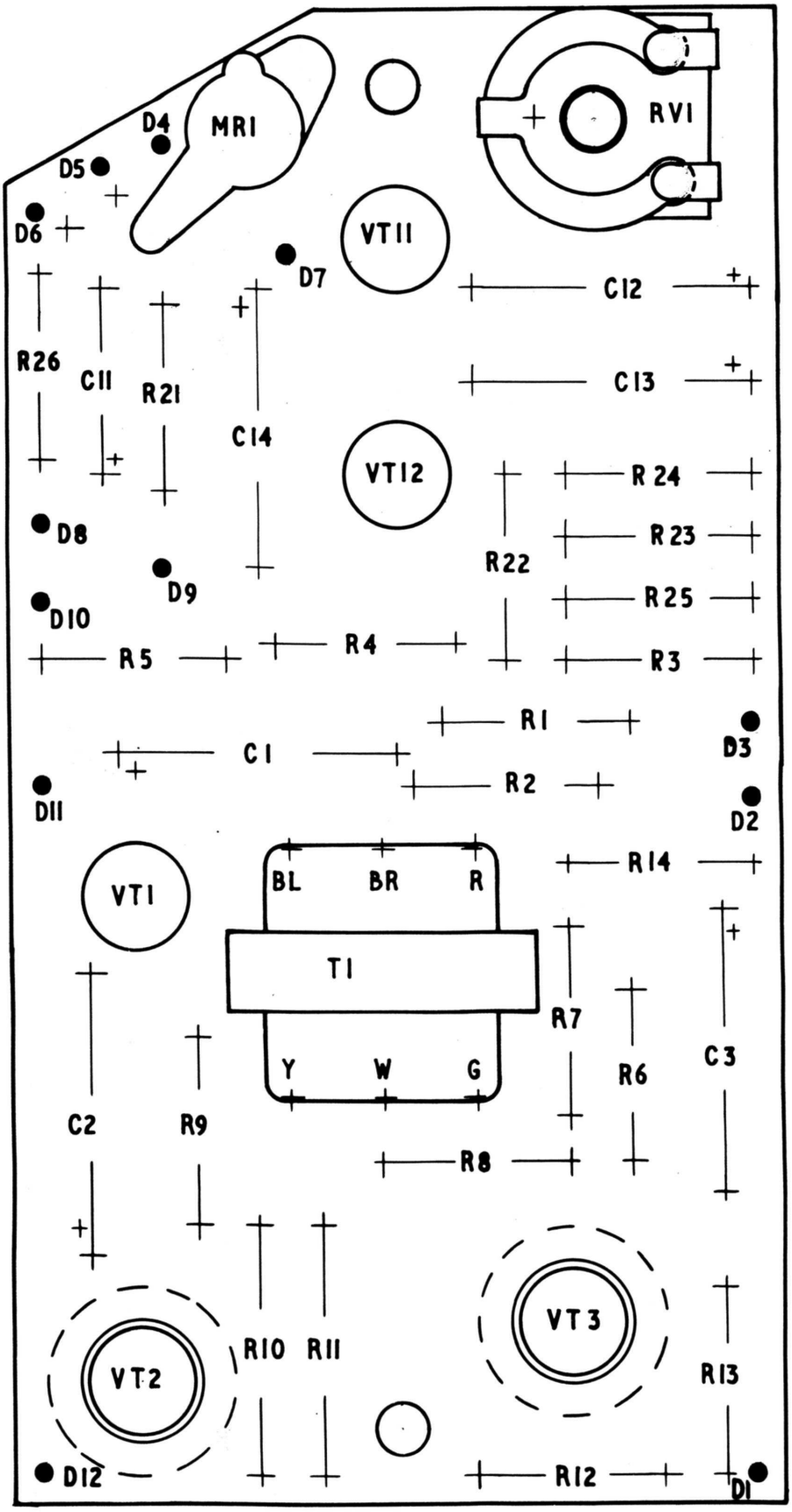

FIG. 14 LOUDSPEAKER & METER AMPLIFIERS - COMPONENT LAYOUT. TL1526

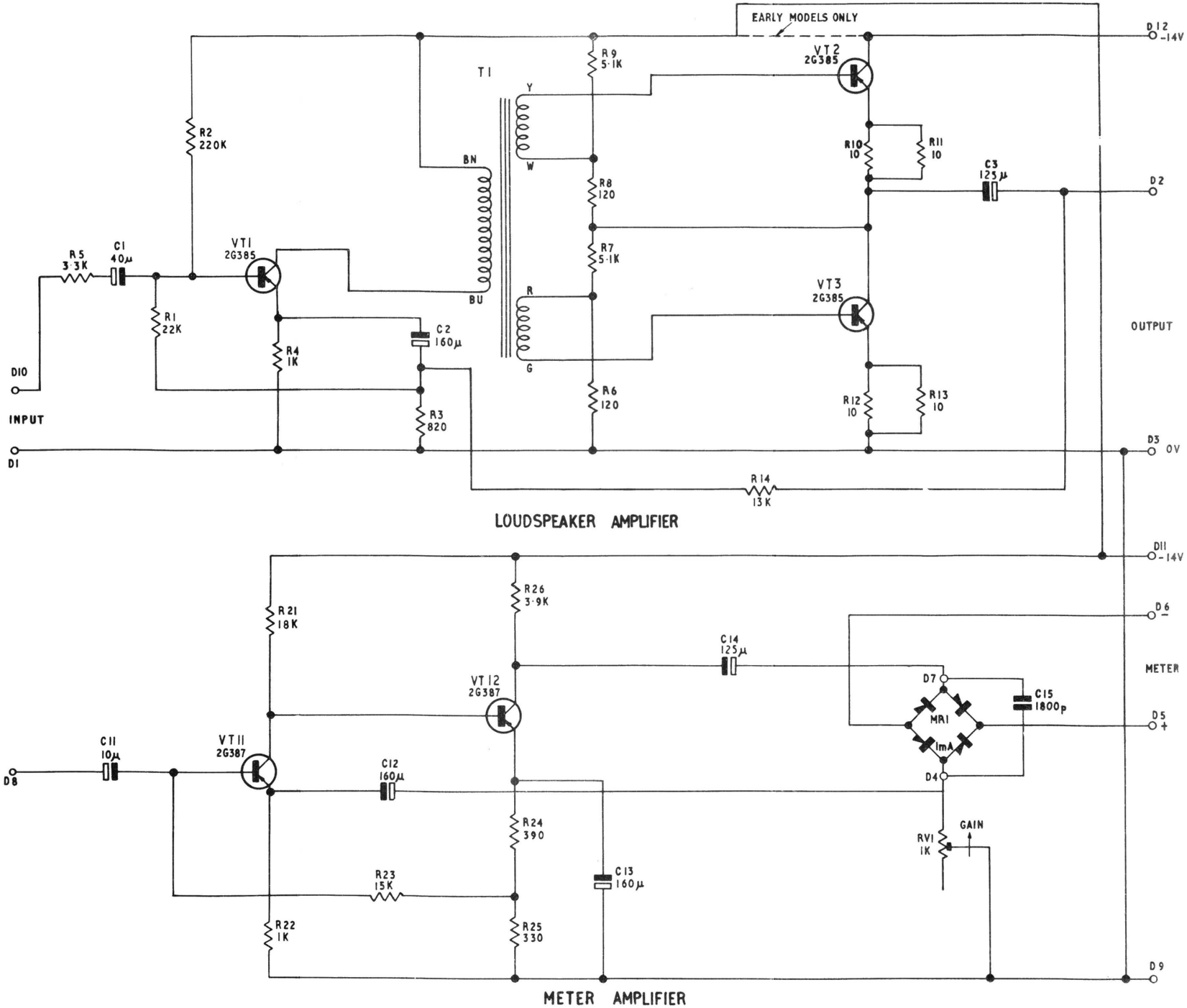

TL1526/8

LOUDSPEAKER & METER AMPLIFIER-CIRCUIT DIAGRAM

FIG. 15

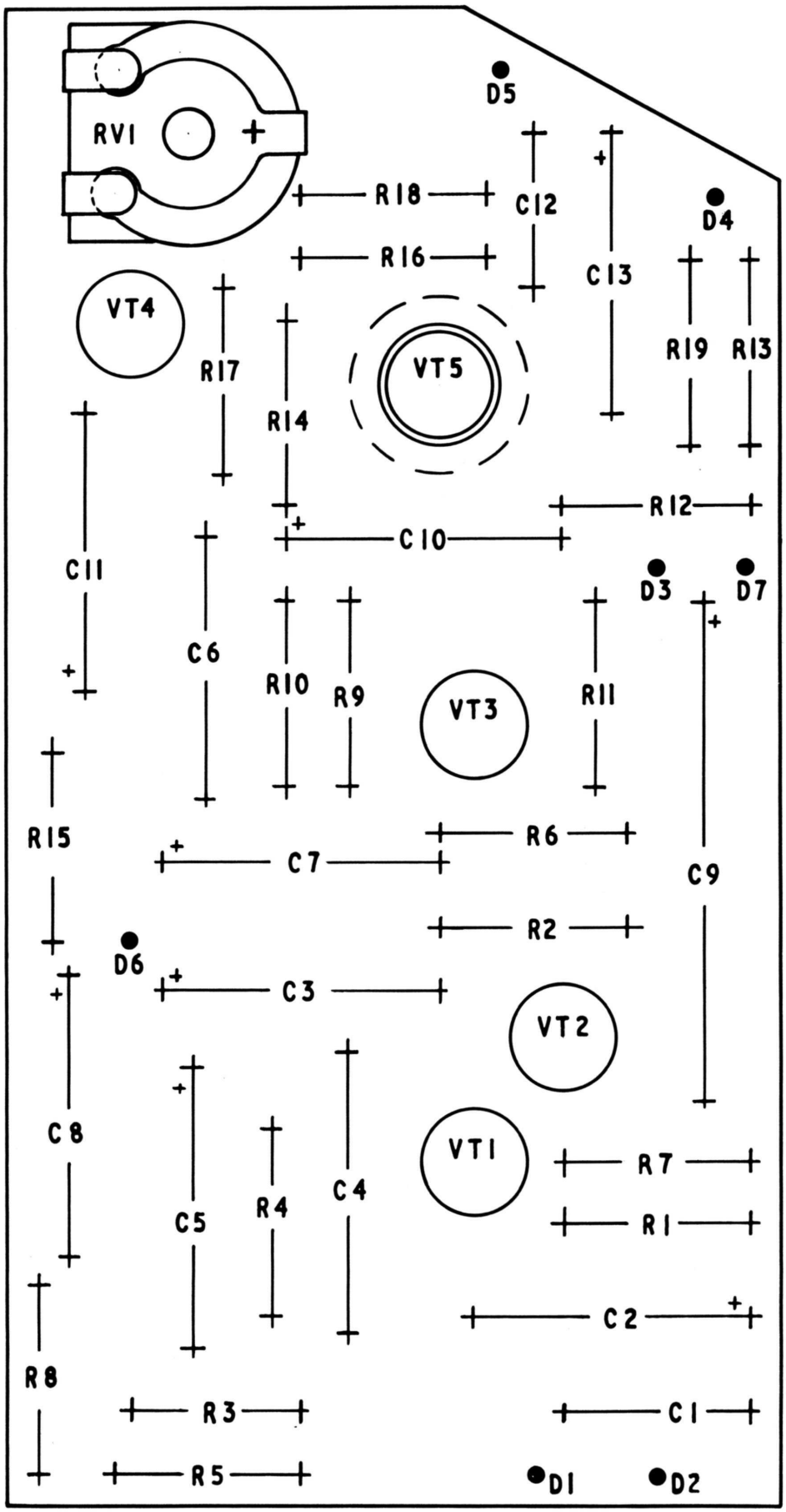

FIG.16 REPLAY AMPLIFIER – COMPONENT LAYOUT TL1526

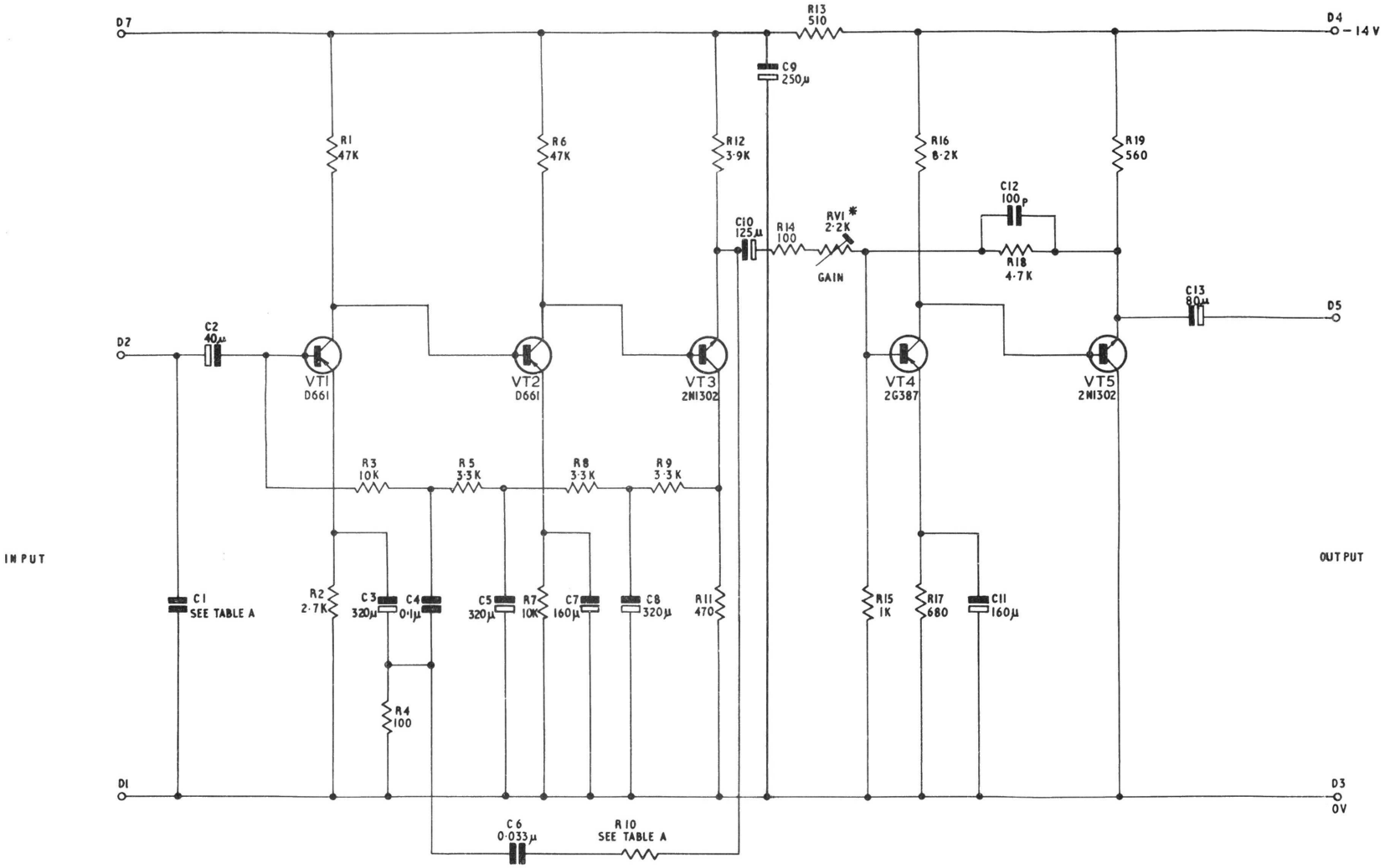

MODEL	VALUE	
	R10	C1
L 4 A	2·7 K	1300p
L 4 A (NAB)	2·4 K	1300p
L 4 B	2·7 K	620p
L 4 B (NAB)	2·4 K	620p
L 4 C	2·7 K	620p
L 4 C (NAB)	2·4 K	620p
L 4 D	2·7 K	1300p
L 4 D (NAB)	2·4 K	1300p

TABLE A

* NOTE: ON EARLY MODELS RV1 IS 1K.Ω

TL 1526/5

REPLAY AMPLIFIER – CIRCUIT DIAGRAM

FIG. 17

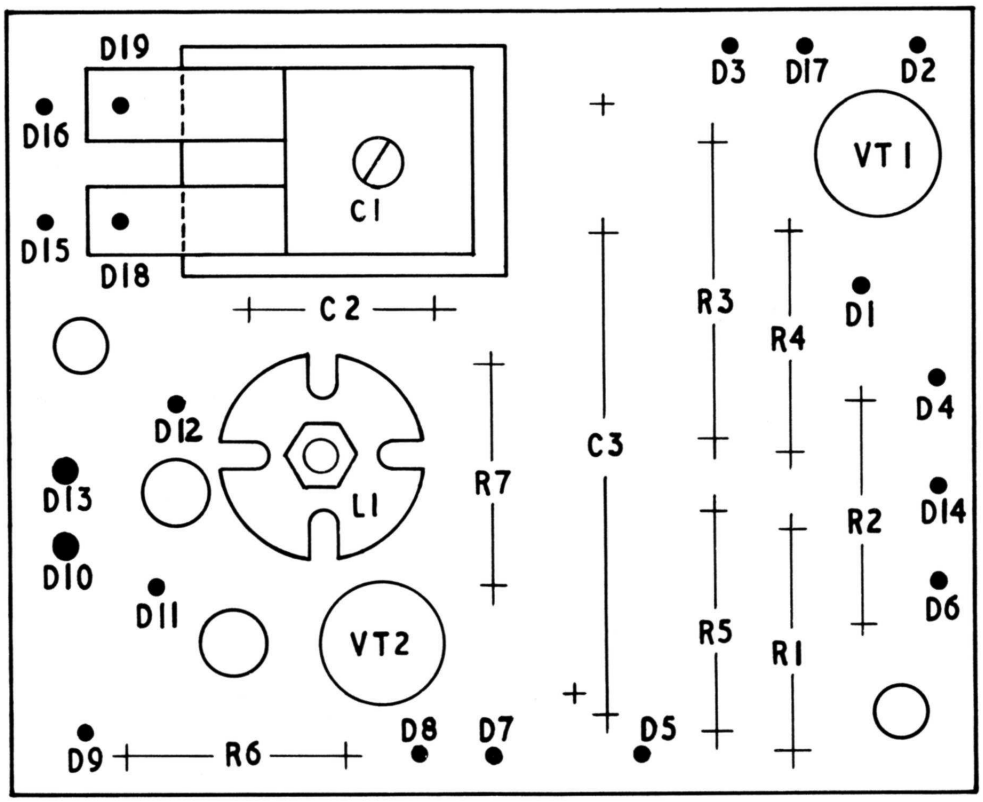

FIG.18 FILTER UNIT - COMPONENT LAYOUT TL.1526

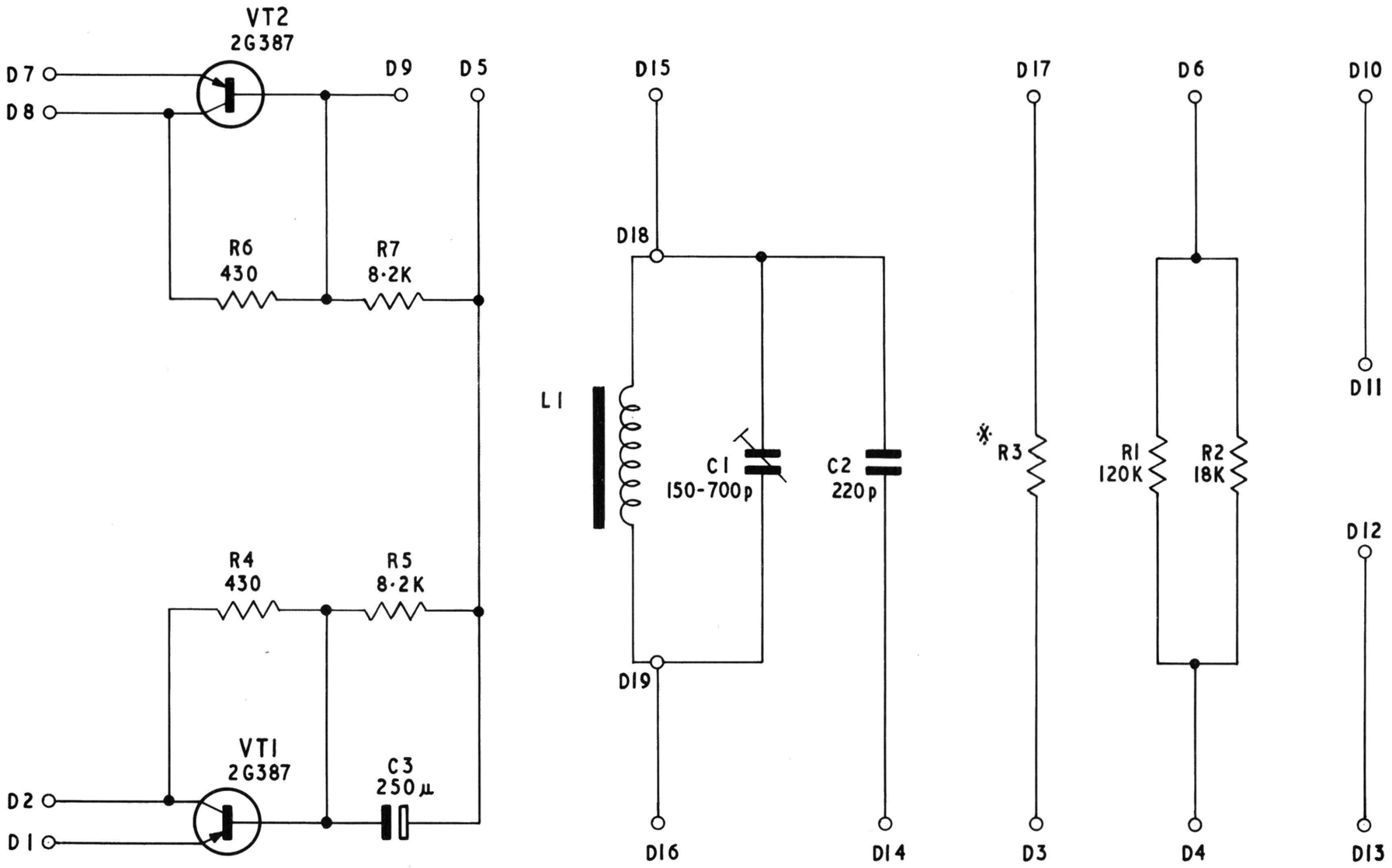

※ THE VALUE OF R3 IS 0·6Ω FOR ALL L4A MODELS.
THE VALUE OF R3 IS 0·33Ω FOR ALL L4B, L4C, AND L4D MODELS.

TL 1526/3

FILTER UNIT – CIRCUIT DIAGRAM

FIG. 19

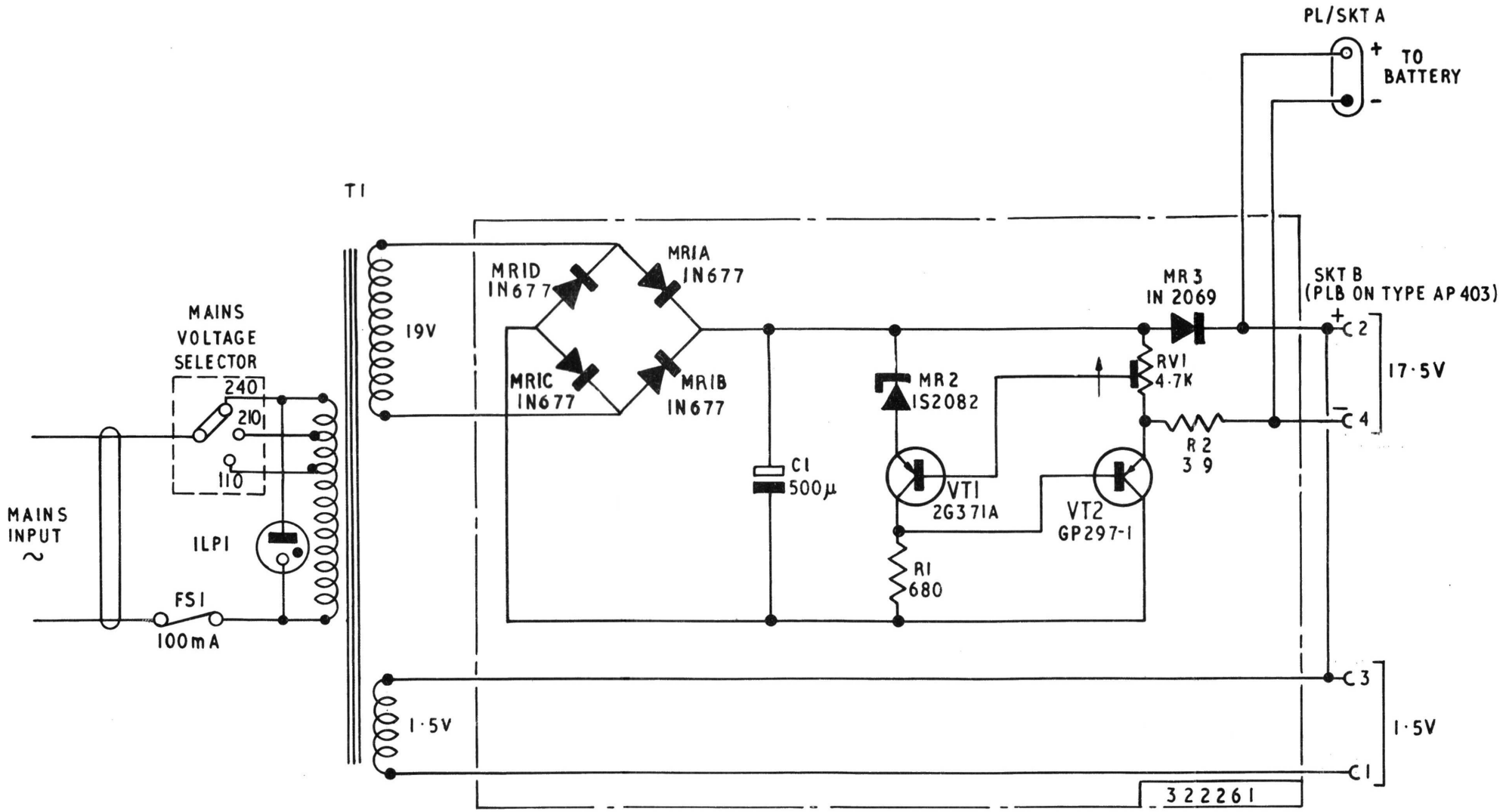

TL1526/4

BATTERY CHARGER TYPES AP403 & AP403A – CIRCUIT DIAGRAM

FIG. 20

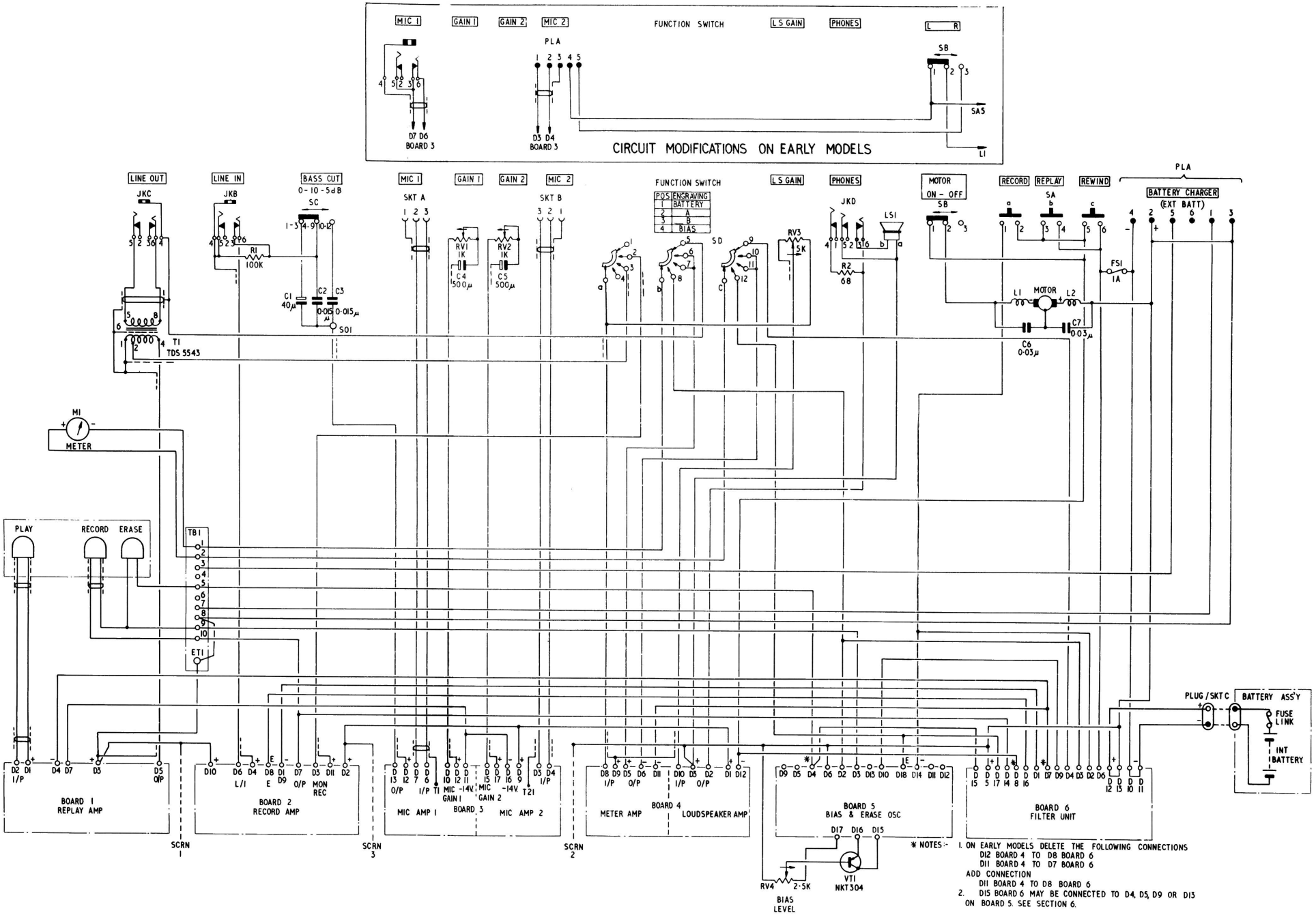

TL 1526

TAPE RECORDERS L4A & L4B - INTERCONNECTIONS

FIG. 21

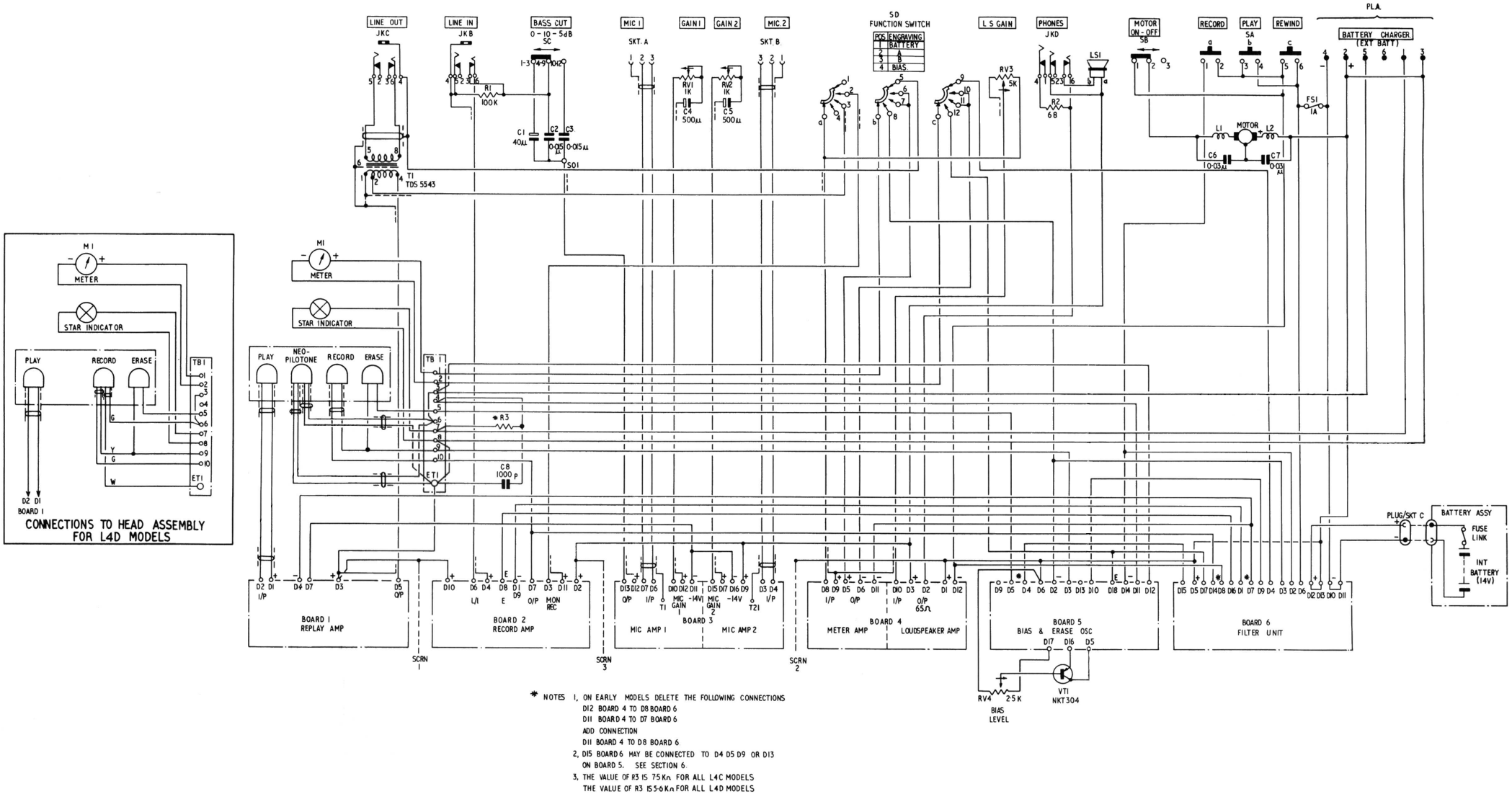

* NOTES 1, ON EARLY MODELS DELETE THE FOLLOWING CONNECTIONS
D12 BOARD 4 TO D8 BOARD 6
D11 BOARD 4 TO D7 BOARD 6
ADD CONNECTION
D11 BOARD 4 TO D8 BOARD 6.
2, D15 BOARD 6 MAY BE CONNECTED TO D4 D5 D9 OR D13
ON BOARD 5. SEE SECTION 6.
3, THE VALUE OF R3 IS 7.5KΩ FOR ALL L4C MODELS
THE VALUE OF R3 IS 5.6KΩ FOR ALL L4D MODELS

TL 1526

TAPE RECORDERS L4C & L4D – INTERCONNECTIONS

FIG. 22