PHILIPS

BROADCASTING EQUIPMENT

Plumbicon* Colour Television Camera Chain Type LDK 3

Three-tube camera with integrated "contours-from-green" principle

XQ 1020 separate mesh Plumbicon tubes with efficient electron beam system

XQ 1025 R red-extended Plumbicon tube usable

Prismatic colour-splitter and linear matrixing for optimum colorimetric response

Solid-state circuitry employing stable silicon transistors

Single camera cable of length up to 1000 metres

Modular type camera control unit (CCU) split up into three sub-assemblies for high operational flexibility

Built-in encoder with colour-bar generator for vectorscope-less encoder adjustment

Two built-in test signals for rapid camera line-up

This third generation Plumbicon colour television camera for studio and outside broadcast use incorporates certain considerable advances in colour television technology as to theory and manufacture. The latest solid-state circuitry techniques allied with modular construction ensure high and constant picture quality, great reliability, minimum maintenance, and flexibility and speed in operation.

CAMERA

Like the previous models, the camera is housed in a strong aluminium construction with hinged sides allowing easy access to the interior from both sides.

A precision lens mount with rapid locking system permits the speedy removal and attachment of the zoom lens. The range of high-quality zoom lenses available for studio and outdoor use includes both manually and servo-controlled models, provision being made in many cases for the use of range extenders.

**Registered trade mark*

Between the lens and the colour-splitting prism are two independent, motor-driven filter discs, one with colour-correction and the other with neutral density filters.

The colour-splitting system comprises a compact, three-piece prism block with two internal colour selective reflection surfaces. The application of electronic matrixing of the primary colour signals in the main amplifier make possible a new, optimum colour-splitting system, with high luminous efficiency, in the prism block. The result is both improved colour faithfulness and increased camera light-sensitivity.

The three Type XQ 1020 tubes, which are of separate mesh construction and have a more efficient beam system, ensure high picture resolution and, through their extended range, a picture quality which is unaffected by unexpected, high signal-current peaks. Dynamic focusing provides for uniformly high resolution over the entire image area.

The camera amplifier in each channel is mounted directly on the coil assembly, the length of the signal cable thus being reduced to a few centimetres. Together with the specially developed cascode input circuit employing low-noise field-effect transistors, this provides an unusually high signal-to-noise ratio.

The deflection and focusing assemblies which are screened by Mu-metal cylinders to reduce the influence of external magnetic fields on the colour registration, are manufactured to the highest standards of precision and fitted with fine adjustments for optical focusing and picture rotation. They can be easily and quickly removed, together with the tube, from the camera, whilst high-precision dove-tail guides ensure that they are re-inserted in exactly the original position relative to the beam of the colour-splitting prism. Tubes are easily and quickly replaced when the deflection coil assemblies are removed.

Great care has been taken to ensure the stability of all circuits. Consequently, mains voltage fluctuations, ageing of components,

and even large variations of temperature and the use of long cable lengths, exercise practically no effect and entail scarcely any readjustments. Automatic stablilisation of the black level and compensation of stray light also render the camera largely independent of the prevailing lighting conditions.

Except for some presets, the camera contains no controls, so that the complete lining-up of the camera chain can be carried out by the CCU operator. To facilitate lining-up, the sawtooth signal from a test signal generator in the camera can be switched to the input of the camera amplifiers. A protection circuit switches the entire camera chain to stand-by position in the event of any horizontal or vertical scan failure.

The electronic viewfinder, with its 7 inch rectangular picture tube, can be swung out of the camera housing as a complete unit and moved without difficulty. Thanks to the high screen voltage of 16 kV, the viewfinder yields extremely sharp and bright images. Any single signal or any combination of two or three signals from the groups R, G and B and Y, G and EXT can be selected by the cameraman by means of push-buttons.

The cueing system comprises, in addition to the usual "on air" signal lamps on the top and back of the camera, an illuminated ring inside the lens shade.

Two headphones sockets on the camera provide for talk-back facilities with the control unit and the producer's room. The appurtenant amplifier in the control unit can also be connected to the local audio channel.

A separate lead for special audio links is incorporated in the camera cable with sockets on the camera and the control unit.

An elapsed-time meter indicating the operational hours of the camera tubes is built into the camera.

The camera chain is designed for use with a Felten & Guilleaume camera cable, Type 756-1, a multi-stage cable-length compensation switch allowing use of cable up to a maximum of 1000 metres in length. Where other makes of cable are employed, the maximum length usable depends on the characteristics of the cable.

Camera Control Unit

In designing the mechanical construction and the circuitry of the camera control unit, a basic aim was the obtainment of a high degree of operational flexibility. To this end, the unit was split up into three separate sub-assemblies, these being the electronics unit, local control unit (with signal monitor), and power supply unit, which are interconnected by cables at the rear. The three can be accommodated either jointly in a 19 inch rack or in three separate 19 inch cabinets. In the latter case the maximum length of cable between the electronics unit and the power supply unit is 10 metres, and that between the electronics unit and the local control unit 100 metres.

Local Control Unit with Colour Waveform Monitor

This assembly incorporates in its lower part a pull-out unit which, on telescopic rails, contains on its front panel all the usual operational controls. When this is pulled out, access is gained to a second, horizontal panel containing all the colour registration and some tube adjustment controls. This panel can be swung up to afford access to the interior of the unit.

Above this, and similarly on telescopic rails, is a pull-out colour waveform monitor with 5 inch rectangular picture tube. The R, G and B signals can be displayed on this waveform monitor either side by side or superimposed and at line or field rate. Built-in X-amplifiers allow the gamma characteristics of the three signals to be rendered directly visible. The waveform monitor is further equipped with inputs for an external blanked video signal and a composite coded colour signal, together with a service probe input for rapid monitoring of the various signals of the module test points.

Power Supply Unit

The mains, rectifying and control circuits for the various stabilising voltages are distributed over six modules in the upper part of this unit, the lower part of which can accommodate the optional ventilator unit, Type EL 8601/51.

The voltage supplies for the video and deflection circuits are separated so as to preclude reciprocal interference. All supply voltages for the camera are automatically adapted to the various lengths of camera cable employed.

The mains voltage for the camera viewfinder and the lens drive system is stabilised against mains voltage fluctuations and the effects of differing cable lengths by means of a regulating circuit with motor-driven variable transformer.

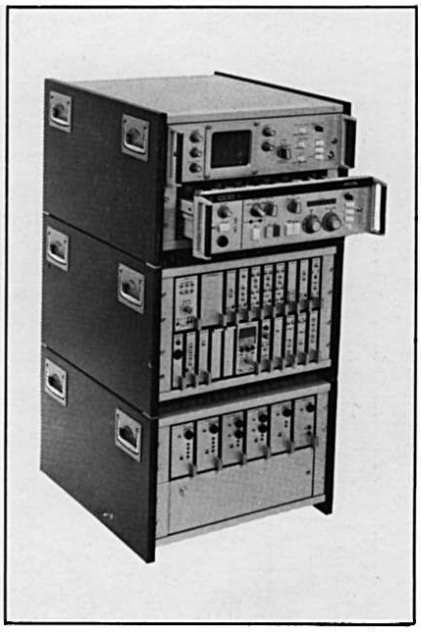

Camera control Unit comprising the Local Control Unit (top), the Electronics Unit (middle) and the Power Supply Unit (bottom)

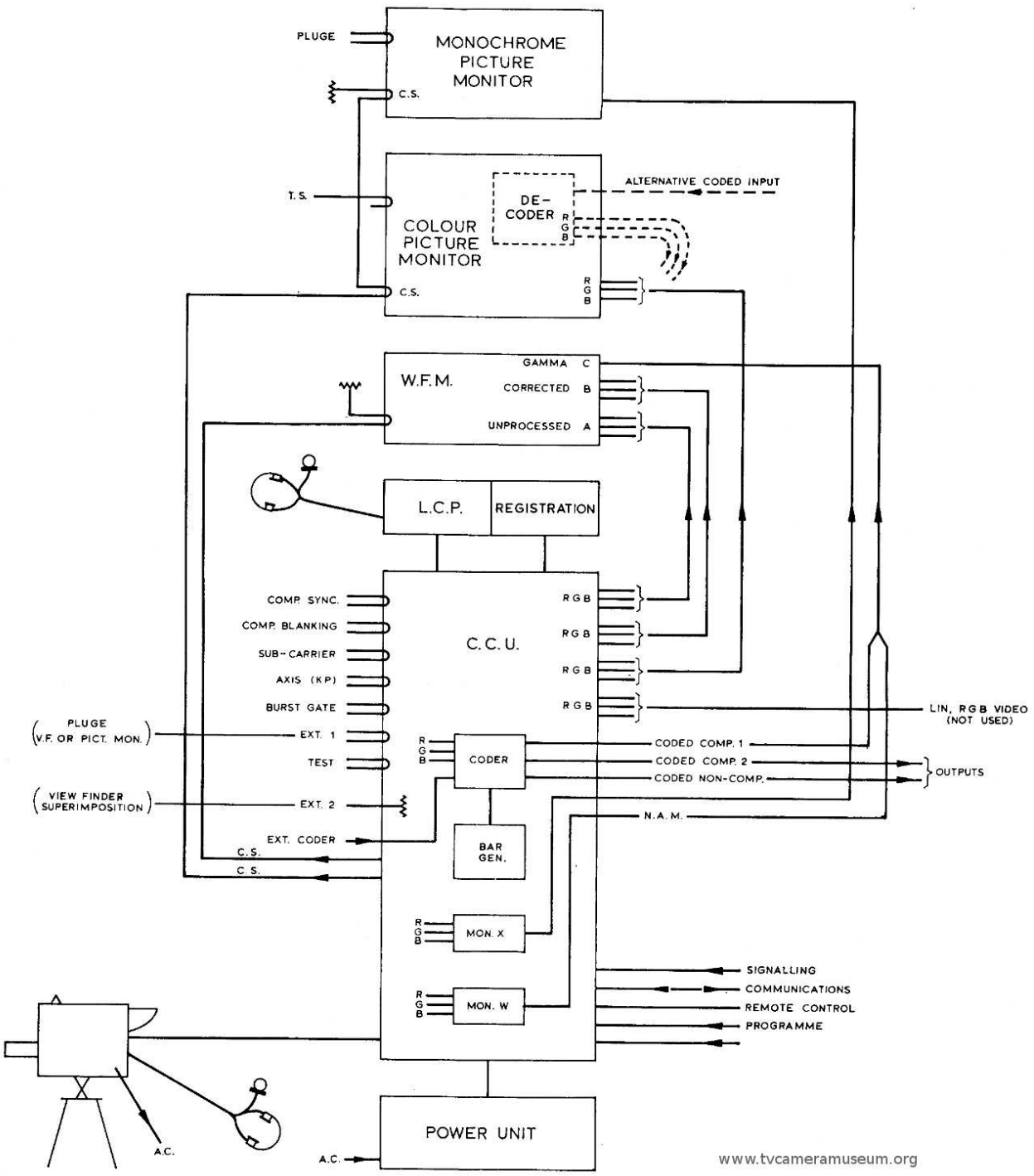

Electronics Unit

The circuitry of this unit is divided into functional sections and is arranged in the form of modules, these containing the circuitry for the main signal amplifier, including that for contour enhancement; pulse generation and shaping; vertical time-base; focusing and beam alignment; encoder with colour-bar generator; picture switching; signalling; communication and remote control. Most of the modules are equipped with test points on the front panel. In addition, two spare bays are provided for module extenders.

Modern solid-state circuitry is employed in all circuits to ensure optimum constancy in operation and high image quality. The three main amplifiers incorporate the following stages :

- Cable length compensation (for camera cable length up to 1000 metres)
- Spurious pulse cancellation
- Master gain control in three stages (+6 dB/0/ −6 dB)
- Green tilt correction (for the green channel only)
- Automatic black level control
- Individual gain control
- Peak light limitation
- Horizontal and vertical contour enhancement
- Linear signal matrixing for simulation of the negative portions of the colour distribution curves
- Level-dependent, horizontal aperture correction
- Master black level control
- Individual black level control
- Composite blanking signal mixing
- White limiting (adjustable from "sharp" to "soft")
- Adjustable gamma correction
- Output-amplifier
- Fivefold distribution amplifier

Available as output signals are: one set of R, G and B signals; three coded colour signals (one without and two with synchronising signal); and a NAM (non-additive mixed) signal, derived from the largest amplitude and the lowest black level of the R, G and B signals, which can be used for simple waveform control systems, automatic exposure control circuits, or in centralised camera matching systems.

Remote control of a maximum of eighteen operational functions is possible, the remote control unit then being adapted to local requirements.

The Electronics Unit

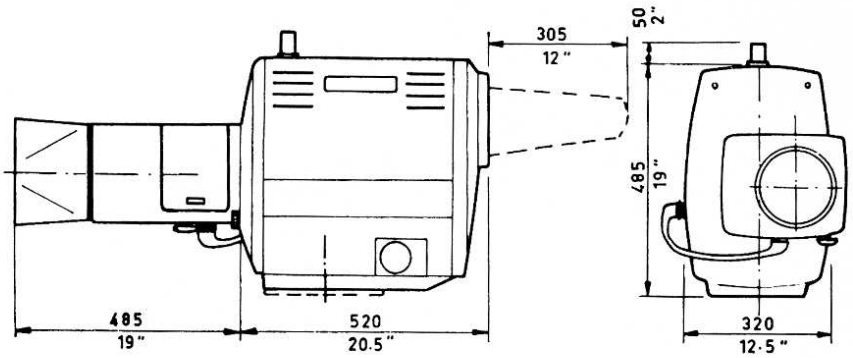

Camera fitted with Angenieux 10 x 18J1 Lens

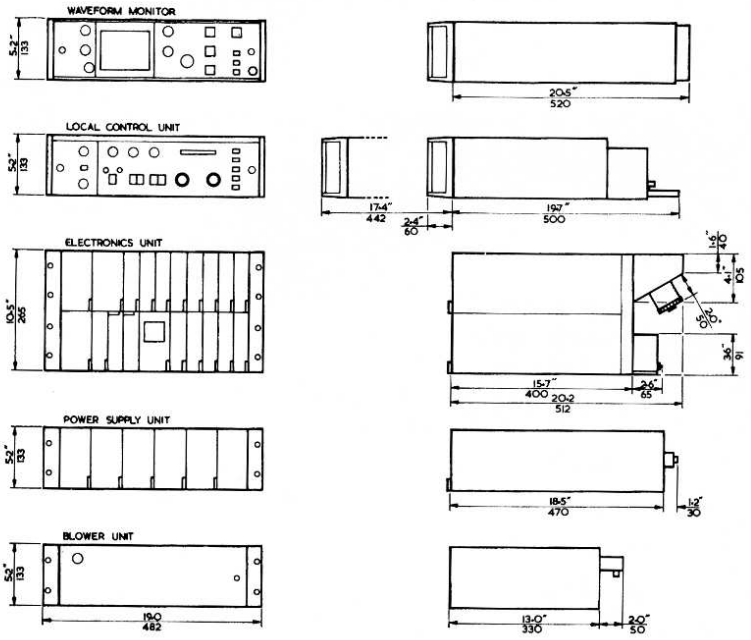

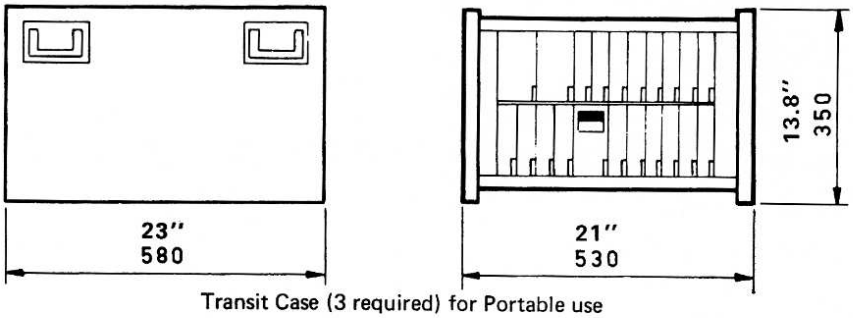

Transit Case (3 required) for Portable use

TECHNICAL DATA

Scanning Systems:
CCIR 625-lines, 50 fields/s
or
EIA 525-lines, 60 fields/s

Power Supply:
110, 117, 220 and 234 V ±5%, 50-60 Hz, adjustable by voltage selectors

Power Consumption:
Camera chain without lens servo-system 350 VA

Input Signals:
Composite blanking signal (B) } 0·75 to 4 V_{pp}
Synchronising signal (S) } negative going
Colour carrier (SC), 0·5 to 4 V_{pp}
External burstgate pulses (bg)
0·5 to 4 V_{pp}, negative going (internal burstgate pulses are provided)
PAL identification pulse (KP), 1 to 4 V_{pp}
All amplitudes across 75 Ω (loop-through sockets)
Supplementary:
Encoder test signal or VIT signal
Line-up test signal
Overlay picture signal
Overrule picture signal
All signals VB, 0·7 V_{pp}, positive going, across 75 Ω

Output Signals:
1 x R, G, B gamma-corrected (VB) signals 0·7 V_{pp}, positive going
1 x composite colour signal (CVB)
1 V_{pp}, positive going
2 x composite colour signal (CVBS)
1 V_{pp}, positive going
2 x synchronising signal (S), 4 V_{pp}, negative going
All signals across 75 Ω

Scene Illumination:
1200 lux for a signal-to-noise ratio of 40 dB in the Y-channel; with lens aperture *f*/4; aperture correction 6 dB at 5 MHz; gamma correction 0·6 and contour enhancement operating at 60% of maximum boost; 100 lux suffices for pictures of acceptable quality at lens aperture *f*/2·2

Resolution:
With aperture correction, 100% modulation depth is obtainable at 5 MHz in each video channel

Colour Registration:
Deviations of Red or Blue in any direction with respect to Green:
In an ellipse with axes 0·9 of the picture height and width, deviations will be no more than the distance equal to a horizontal scanning time of 40 nanoseconds
Within a circle of a diameter equal to the picture width, deviations will be no more than 80 nanoseconds
Outside this circle, deviations will be no more than 120 nanoseconds

Registration Drift:
Deviations of Red or Blue in any direction with respect to Green:
Variations of the ambient temperature of the camera of no more than ±10°C from the temperature during registration setting (within the range of −10°C to +45°C) will not cause mutual picture shifts larger than 50 nanoseconds

Geometry Error:
Maximum 0·5% of the picture height within the ellipse; maximum 1% outside the ellipse (lens distortion excepted)

Signal-to-noise Ratio:
48 dB in each channel, at a signal current of 300 nanoAmp, without aperture, contour and gamma corrections, measured in a bandwidth of 5 MHz at 40% of the nominal white level

Gain Control:
Master selection in three stages:
−6 dB, 0 dB, +6 dB; individual control for ±3 dB in each channel

Frequency Response:
Without aperture correction:
±0·5 dB up to 5 MHz;
−3 dB at 7 MHz

Aperture Correction:
Preset for maximum of +10 dB correction at 5 MHz; preset for amplitude threshold between 0 and 100% of the nominal white level

Gamma Correction:
3-step selector for:
linear operation
gamma = 0·35 to 0·6 (adjustable) and
gamma = 0·6 to 1 (adjustable)
Reciprocal deviations smaller than 0·5% relative to the nominal white level

Black Level Adjustment:
Master control for adjustment between −40 to +50% of the nominal white level
Individual control for adjustment between −15 and +15% of the nominal white level

Lenses:
Standard lens:
Angenieux 10 x 18J11, *f*/2·2;
18–180 mm, with full servo-control
For other lenses see special list

Camera Cable:
Felten & Guilleaume, Type 756-1, standard length 50 metres; maximum permissible length 1000 metres

Encoder with Colour-bar Generator:
In five modules. Versions available for PAL or NTSC system

Contour Extractor:
In two modules. Versions for CCIR or EIA standard

Colour Waveform Monitor:
Type LDK 4910

Warming-up Period:
Very good colour registration is obtained after two minutes. The operating values specified are reached and remain stable after 30 minutes

Permissible Ambient Temperature:
−10°C to +45°C

Dimensions: See sketches

Weight:

Camera without lens and servo-amplifier:	42 kg
Camera with lens Angenieux 10 x 18J11 and complete servo-control equipment:	75 kg
Electronics unit:	34 kg
Local control unit with colour waveform monitor:	36 kg
Power supply unit:	29 kg

Specification details subject to change without notice

PYE TVT LIMITED
CAMBRIDGE CB1 3JU ENGLAND TELEPHONE CAMBRIDGE 45115 TELEX 81103

Supplied by PYE TVT. LIMITED Cambridge England. For and on behalf of PYE LIMITED, Owners of the Trade Mark PYE

Printed in Great Britain. E/TN Issue 1